Formal Consultative Meeting of the States Parties to the Convention on the Prohibition of the Development, Production and Stockpiling of Bacteriological (Biological) and Toxin Weapons and on Their Destruction

Distr.: General
6 September 2022

English only

2022 Meeting
Geneva, 26 August and 5-9 September 2022
Item 6 of the agenda
Respective outstanding questions by the Russian Federation to the United States and to Ukraine concerning the fulfilment of their respective obligations under the Convention in the context of the operation of biological laboratories in Ukraine

Questions for the United States regarding compliance with obligations under Article IV of the Convention on the Prohibition of the Development, Production and Stockpiling of Bacteriological (Biological) and Toxin Weapons and on their Destruction (BWC) in the context of the development of means of delivery of biological weapons

Submitted by the Russian Federation

Patents given by the U.S. Agency on patents and trademarks US 8,967,029 B1

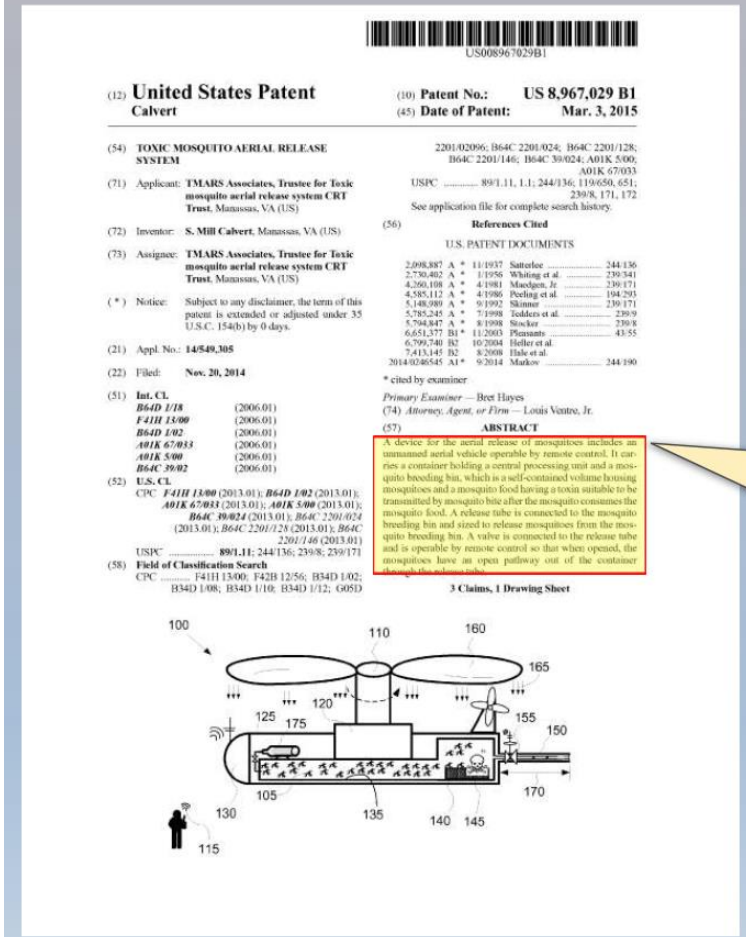

US008967029B1

(12) **United States Patent**
Calvert

(10) **Patent No.: US 8,967,029 B1**
(45) **Date of Patent: Mar. 3, 2015**

(54) **TOXIC MOSQUITO AERIAL RELEASE SYSTEM**

(71) Applicant: **TMARS Associates, Trustee for Toxic mosquito aerial release system CRT Trust**, Manassas, VA (US)

(72) Inventor: **S. Mill Calvert**, Manassas, VA (US)

(73) Assignee: **TMARS Associates, Trustee for Toxic mosquito aerial release system CRT Trust**, Manassas, VA (US)

(*) Notice: Subject to any disclaimer, the term of this patent is extended or adjusted under 35 U.S.C. 154(b) by 0 days.

(21) Appl. No.: **14/549,305**

(22) Filed: **Nov. 20, 2014**

(51) **Int. Cl.**
B64D 1/18 (2006.01)
F41H 13/00 (2006.01)
B64D 1/02 (2006.01)
A01K 67/033 (2006.01)
A01K 5/00 (2006.01)
B64C 39/02 (2006.01)

(52) **U.S. Cl.**
CPC ***F41H 13/00*** (2013.01); ***B64D 1/02*** (2013.01); ***A01K 67/033*** (2013.01); ***A01K 5/00*** (2013.01); ***B64C 39/024*** (2013.01); *B64C 2201/024* (2013.01); *B64C 2201/146* (2013.01)
USPC **89/1.11**; 244/136; 239/8; 239/171

(58) **Field of Classification Search**
CPC F41H 13/00; F42B 12/56; B34D 1/02; B34D 1/08; B34D 1/10; B34D 1/12; G05D 2201/02096; B64C 2201/024; B64C 2201/128; B64C 2201/146; B64C 39/024; A01K 5/00; A01K 67/033
USPC 89/1.11, 1.1; 244/136; 119/650, 651; 239/8, 171, 172
See application file for complete search history.

(56) **References Cited**

U.S. PATENT DOCUMENTS

2,098,887	A *	11/1937	Satterlee	244/136
2,730,482	A *	1/1956	Whiting et al.	239/341
4,260,108	A *	4/1981	Maedgen, Jr.	239/171
4,585,112	A *	4/1986	Peeling et al.	194/293
5,140,989	A *	9/1992	Skinner	239/171
5,785,245	A *	7/1998	Tedders et al.	239/9
5,794,847	A *	8/1998	Stocker	239/8
6,651,377	B1 *	11/2003	Pleasants	43/55
6,799,740	B2	10/2004	Heller et al.	
7,413,145	B2	8/2008	Hale et al.	
2014/0246545	A1 *	9/2014	Markow	244/190

* cited by examiner

Primary Examiner — Bret Hayes
(74) *Attorney, Agent, or Firm* — Louis Ventre, Jr.

(57) **ABSTRACT**

A device for the aerial release of mosquitoes includes an unmanned aerial vehicle operable by remote control. It carries a container holding a central processing unit and a mosquito breeding bin, which is a self-contained volume housing mosquitoes and a mosquito food having a toxin suitable to be transmitted by mosquito bite after the mosquito consumes the mosquito food. A release tube is connected to the mosquito breeding bin and sized to release mosquitoes from the mosquito breeding bin. A valve is connected to the release tube and is operable by remote control so that when opened, the mosquitoes have an open pathway out of the container through the release tube.

3 Claims, 1 Drawing Sheet

In accordance with the description, an unmanned aerial vehicle carries to a given area a container with an important quantity of mosquito vectors and releases them. When biting, the mosquitoes infect the attacked people with the causative agent of infectious diseases.

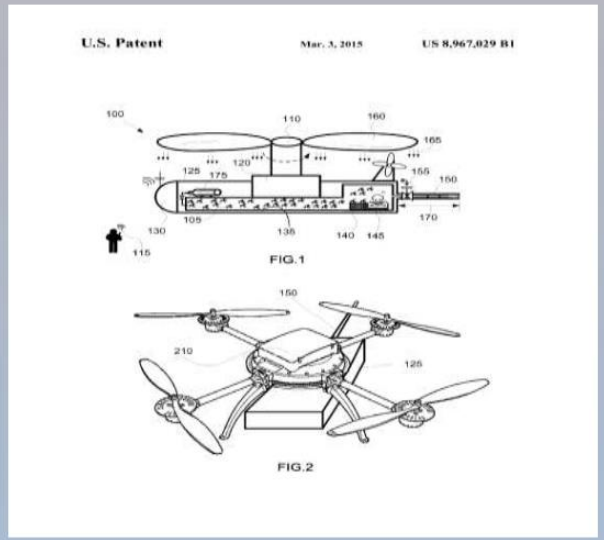

Governments seek after weapons, that can be use to deliver chemicals, viral and bacteriological substances for lethal and non-lethal use...
The present invention is capable of delivering lethal and non-lethal toxins, including any agent that can be administrated and carried by a mosquito.

Patents given by the U.S. Agency on patents and trademarks US 8,794,155 B1

US008794155B1

(12) **United States Patent**
Calvert

(10) **Patent No.: US 8,794,155 B1**
(45) **Date of Patent: Aug. 5, 2014**

(54) **HOLLOW POINT PAYLOAD CAPSULES**

(71) Applicant: **HP Associates, Trustee for HPCC CRT Trust**, Manassas, VA (US)

(72) Inventor: **S. Mill Calvert**, Manassas, VA (US)

(73) Assignee: **HP Associates**, Manassas, VA (US); Trustee for HPCC CRT Trust

(*) Notice: Subject to any disclaimer, the term of this patent is extended or adjusted under 35 U.S.C. 154(b) by 0 days.

(21) Appl. No.: **14/051,821**

(22) Filed: **Oct. 11, 2013**

(51) **Int. Cl.**
F42B 5/02 (2006.01)

(52) **U.S. Cl.**
USPC **102/512**; 102/502; 102/439; 102/513

(58) **Field of Classification Search**
USPC 102/512, 502, 438, 439, 513
See application file for complete search history.

(56) **References Cited**

U.S. PATENT DOCUMENTS

3,972,286	A	8/1976	Canon	
3,980,023	A *	9/1976	Misevich	102/502
4,913,054	A	4/1990	Petersen	
7,143,699	B2	12/2006	Brock	
7,213,519	B2 *	5/2007	Wiley et al.	102/467
2006/0075919	A1 *	4/2006	Wiley et al.	102/464

OTHER PUBLICATIONS

Sage Control Ordinance Inc., Model BP45, 40MM Barricade Penetrating Projectile, specifications, published online at http://www.sageinternationalltd.com/SCOI/specs/SCOI_Spec/Shoot_BP45.pdf, downloaded Oct. 10, 2013.

* cited by examiner

Primary Examiner — Michael David
(74) *Attorney, Agent, or Firm* — Louis Ventre, Jr.

(57) **ABSTRACT**

A system includes an incomplete cartridge for a firearm and a field-selectable capsule for the cartridge. The capsule contains a product that may tag a person for tracing, induce sleep, cause disease, or have other effects. Capsules are preferably removably adhered to a strip with each strip of capsules potentially serving a different purpose. The incomplete cartridge includes a bullet that has an opening at the payload end. The opening receives and retains a capsule upon insertion. The capsule is made of a frangible material that releases the product upon impact. The capsule may be formed with a snap-in ridge extending from its exterior wall, which snaps into a complementary recess in the bullet opening. Alternatively, the capsule may be coated with a contact adhesive so that it sticks to the bullet wall defining the opening. A peel-off covering atop the strip shields the contact adhesive from contamination.

4 Claims, 2 Drawing Sheets

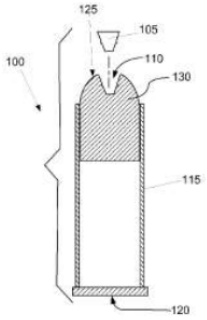

Even if the gunshot wound is not fatal, the person so injured may die as a result of infection. In the latter case, the infected person themselves becomes a source of infection.

The point of this invention is that a capsule containing a poison or an infectious agent is inserted into the cartridge.

US 8,794,155 B1

1

HOLLOW POINT PAYLOAD CAPSULES

TECHNICAL FIELD

In the field of ammunition and explosives, an incomplete cartridge for a firearm that can be loaded in the field with one of a variety of capsules containing an incapacitating, fatal or marking agent for delivery to a target.

BACKGROUND ART

In the War on Terror and military and law enforcement actions, there are specific situations that require specific equipment with, and there may only be a short time of seconds or minutes within which to have to deal with the situation. The Hollow Point capsule gives the soldier or police officer the ability instantly modify his ammunition to accomplish the task at hand. He can instantly insert the needed capsule to deal with the situation.

If the Special Forces need intelligence from a terrorist and do not want him dead, they can insert a sleeping agent and shoot him with a minor flesh wound. When the Hollow Point Payload Capsule goes into a body, the solution inside will go all over the wound damage and be absorbed into the blood stream. The terrorist would then fall asleep and could easily be picked up for intelligence.

With a deadly poison the Hollow Point Payload Capsule, even the smallest round such as a .22, can be a fatal one shot one kill, no matter where the bullet hits. Special Forces can also decide to insert a Hollow Point Payload Capsule with a sickness disease agent so the terrorist goes back to the hide-away with all the other terrorists and makes the whole lot of them very sick. There is no limit to the type of solution particles that can be put inside the Hollow Point Payload Capsule. Some of the common agents maybe: tranquilizer, poison, nerve sickness, sleeping, infection, disease, radioactive, drugs, vaccines, identity markers, radiofrequency identification chips, etc.

The capsules may be semi-rigid or may be pliable to mold and fit into different openings in the bullet. There can be a variety of different capsule sizes. There may be one size that fits into any common size pistol bullet. There could be a tiny size made to fit into small rounds such as .22 caliber. There may be a size made to fit into riffle bullets for snipers.

SUMMARY OF INVENTION

A system includes an incomplete cartridge for a firearm and a field-selectable capsule for the cartridge to complete the cartridge in the field. The capsule contains a product that may tag a person for tracing, induce sleep, cause disease, or have other effects. The capsules are preferably removably adhered on a strip with each strip of capsules potentially serving a different purpose. The incomplete cartridge includes a bullet that has an opening at the payload end. The opening is structured to receive and retain one of the capsules when the payload end is pressed against the capsule on the strip. The capsule is made of a frangible material that releases the product after impact of the bullet once fired from the weapon. The capsule may be formed with a snap-in ridge extending from its exterior wall. The ridge snaps into a complementary recess in the bullet opening. Alternatively, the capsule may be coated with a contact adhesive so that it sticks to the bullet wall defining the opening. A peel-off covering atop the strip shields the contact adhesive on the plurality of capsules.

2

Technical Problem

There is a need for a cartridge that is quickly field-finished to suit a variety of tactical environments and fluid objectives faced by Special Forces and tactical police teams. While cartridges exist to increase the lethality of a hit, none permit changes to the cartridge in the field to accomplish shifting objectives and perhaps more than increased lethality, such as inducing sleep to promote capture, causing contagious infection to spread its incapacitating effect to a terrorist group, or tagging so that the target can be tracked to a lair.

Solution to Problem

The solution is an incomplete cartridge for a firearm that is completed in the field with a capsule selected from a variety of capsules serving potentially diverse goals to meet potentially shifting field conditions faced by Special Forces and tactical police teams.

Advantageous Effects of Invention

The Hollow Point Payload Capsule could make any sniper hit a lethal kill even if the terrorist was hit with a flesh wound.

Different strips of capsules would be labeled and color coded so the soldier could instantly see and utilize the specific payload he needs.

With the Hollow Point Payload Capsule, the soldier or law enforcement officer would be able to instantly change his rounds to a job-specific round to accomplish his objective.

The Hollow Point Payload Capsule will help to save the lives of our brave law enforcement personnel and soldiers and help them to accomplish their missions so that America can remain the land of the free.

BRIEF DESCRIPTION OF DRAWINGS

The drawings illustrate preferred embodiments of the hollow point payload capsules according to the disclosure. The reference numbers in the drawings are used consistently throughout. New reference numbers in FIG. **2** are given the 200 series numbers. Similarly, new reference numbers in each succeeding drawing are given a corresponding series number beginning with the figure number.

FIG. **1** is an exploded elevation view of the system showing a sectional view of an incomplete cartridge and a side view of a capsule in a first embodiment.

FIG. **2** is an exploded elevation view of an alternative embodiment of the system showing a sectional view of a second bullet and a side view of a second capsule in a second embodiment.

FIG. **3** is a side elevation view of a third capsule with an adhesive coating.

FIG. **4** is a sectional elevation view of the capsule showing a snap-in ridge and the product inside.

FIG. **5** is a side elevation view of capsules adhered to a strip.

FIG. **6** is a top view of the capsules adhered to the strip.

FIG. **7** is a side elevation view of the capsules adhered to the strip and a plastic cover atop the capsules.

FIG. **8** is a sectional elevation view of a loaded and complete cartridge.

DESCRIPTION OF EMBODIMENTS

In the following description, reference is made to the accompanying drawings, which form a part hereof and which

Patents, given by the U.S. Patent and Trademark Office
US 9,052,175 B1

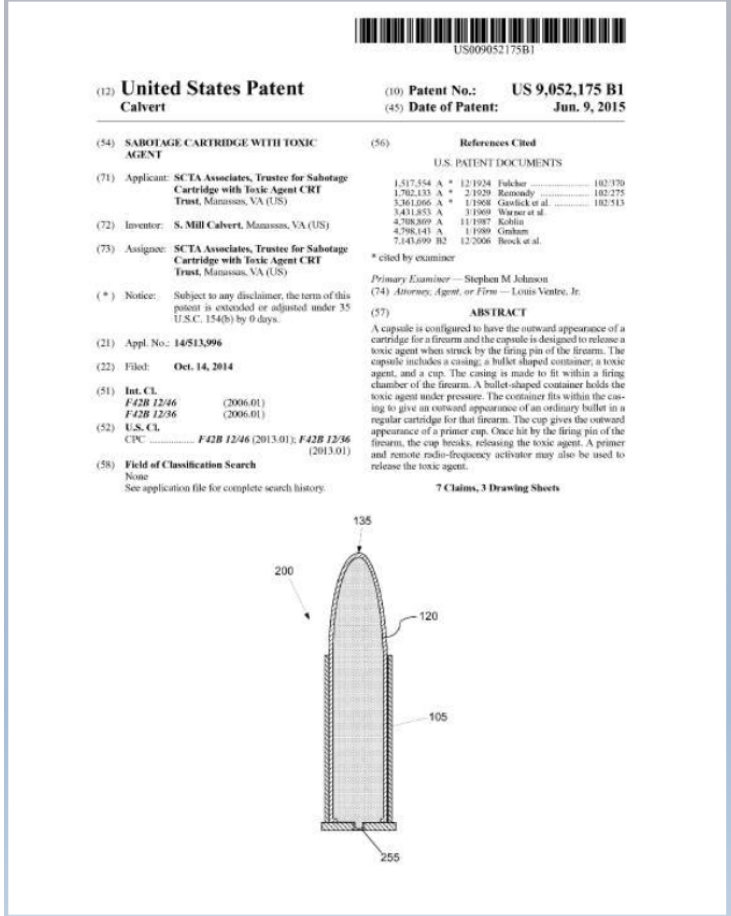

US009052175B1

(12) **United States Patent**
Calvert

(10) **Patent No.: US 9,052,175 B1**
(45) **Date of Patent: Jun. 9, 2015**

(54) **SABOTAGE CARTRIDGE WITH TOXIC AGENT**

(71) Applicant: **SCTA Associates, Trustee for Sabotage Cartridge with Toxic Agent CRT Trust**, Manassas, VA (US)

(72) Inventor: **S. Mill Calvert**, Manassas, VA (US)

(73) Assignee: **SCTA Associates, Trustee for Sabotage Cartridge with Toxic Agent CRT Trust**, Manassas, VA (US)

(*) Notice: Subject to any disclaimer, the term of this patent is extended or adjusted under 35 U.S.C. 154(b) by 0 days.

(21) Appl. No.: **14/513,996**

(22) Filed: **Oct. 14, 2014**

(51) **Int. Cl.**
F42B 12/46 (2006.01)
F42B 12/36 (2006.01)

(52) **U.S. Cl.**
CPC *F42B 12/46* (2013.01); *F42B 12/36* (2013.01)

(58) **Field of Classification Search**
None
See application file for complete search history.

(56) **References Cited**

U.S. PATENT DOCUMENTS

1,517,554	A *	12/1924	Fulcher	102/370
1,782,133	A *	2/1929	Remondy	102/275
3,361,066	A *	1/1968	Gawlick et al.	102/513
3,431,853	A	3/1969	Warner et al.	
4,708,869	A	11/1987	Kohlin	
4,798,143	A	1/1989	Graham	
7,143,699	B2	12/2006	Brock et al.	

* cited by examiner

Primary Examiner — Stephen M Johnson
(74) *Attorney, Agent, or Firm* — Louis Ventre, Jr.

(57) **ABSTRACT**

A capsule is configured to have the outward appearance of a cartridge for a firearm and the capsule is designed to release a toxic agent when struck by the firing pin of the firearm. The capsule includes a casing, a bullet shaped container, a toxic agent, and a cup. The casing is made to fit within a firing chamber of the firearm. A bullet-shaped container holds the toxic agent under pressure. The container fits within the casing to give an outward appearance of an ordinary bullet in a regular cartridge for that firearm. The cup gives the outward appearance of a primer cup. Once hit by the firing pin of the firearm, the cup breaks, releasing the toxic agent. A primer and remote radio-frequency activator may also be used to release the toxic agent.

7 Claims, 3 Drawing Sheets

The device is considered to be of interest for the armed forces in general and special operations forces in particular.

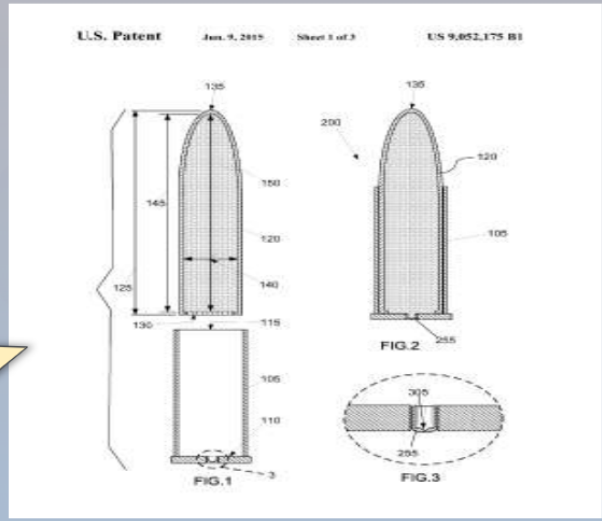

It is envisaged to produce cartridges which look indistinguishable from conventional ammunition, but in fact are filled with a poisonous substance. When the firing pin of the weapon strikes the capsule, the cartridge breaks and releases a poisonous substance that affects the shooter.

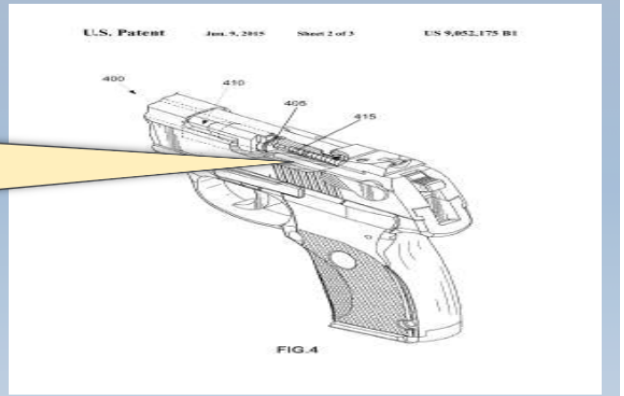

U.S. national legislation related to biological weapons

Patriot Act

Other short titles	Uniting and Strengthening America by Providing Appropriate Tools to Restrict, Intercept and Obstruct Terrorism Act of 2001
Long title	An Act to deter and punish terrorist acts in the United States and across the globe, to enhance law enforcement investigatory tools, and for other purposes.
Acronyms (colloquial)	USA PATRIOT Act
Nicknames	Patriot Act
Enacted by	the 107th United States Congress

USA Freedom Act

Other short titles	Uniting and Strengthening America by Fulfilling Rights and Ensuring Effective Discipline Over Monitoring Act of 2015
Long title	An Act To reform the authorities of the Federal Government to require the production of certain business records, conduct electronic surveillance, use pen registers and trap and trace devices, and use other forms of information gathering for foreign intelligence, counterterrorism, and criminal purposes, and for other purposes.
Acronyms (colloquial)	USA FREEDOM Act
Nicknames	Freedom Act
Enacted by	the 114th United States Congress

Unipolar interpretation of international agreements

Investing subordinate organisations with attributive functions

Priority of the national legislation over the international one

Ratification of international agreements with numerous reserves

PUBLIC LAW 107–56—OCT. 26, 2001

UNITING AND STRENGTHENING AMERICA BY PROVIDING APPROPRIATE TOOLS REQUIRED TO INTERCEPT AND OBSTRUCT TERRORISM (USA PATRIOT ACT) ACT OF 2001

SEC. 817. EXPANSION OF THE BIOLOGICAL WEAPONS STATUTE.

Chapter 10 of title 18, United States Code, is amended—

(1) in section 175—

(A) in subsection (b)—

(i) by striking "does not include" and inserting "includes";

(ii) by inserting "other than" after "system for"; and

(iii) by inserting "bona fide research" after "protective";

(B) by redesignating subsection (b) as subsection (c); and

(C) by inserting after subsection (a) the following:

"(b) ADDITIONAL OFFENSE.—Whoever knowingly possesses any biological agent, toxin, or delivery system of a type or in a quantity that, under the circumstances, is not reasonably justified by a prophylactic, protective, bona fide research, or other peaceful purpose, shall be fined under this title, imprisoned not more than 10 years, or both. In this subsection, the terms 'biological agent' and 'toxin' do not encompass any biological agent or toxin that is in its naturally occurring environment, if the biological agent or toxin has not been cultivated, collected, or otherwise extracted from its natural source.";

(2) by inserting after section 175a the following:

"(4) The term 'lawfully admitted for permanent residence' has the same meaning as in section 101(a)(20) of the Immigration and Nationality Act (8 U.S.C. 1101(a)(20)).

"(c) Whoever knowingly violates this section shall be fined as provided in this title, imprisoned not more than 10 years, or both, but the prohibition contained in this section shall not apply with respect to any duly authorized United States governmental activity."; and

(3) in the chapter analysis, by inserting after the item relating to section 175a the following:

"175b. Possession by restricted persons.".

U.S. reaction to the memo of the Ministry of Foreign Affairs of Russia

Aide Memoire from the Russian Federation
"Questions to the United States regarding its compliance with the BWC and CWC"
Response from the United States

On October 12, 2018, the Russian Embassy in Washington provided to the U.S. Department of State an Aide Memoire on the above subject. In response to the points outlined in the Russian Aided Memoire, and keeping in mind our commitment to consult and cooperate in addressing issues which may arise in relation to the these Conventions, this document provides the reply of the United States. In short, the United States fully complies with its obligations under both the Biological Weapons Convention (BWC) and the Chemical Weapons Convention (CWC).

The Russian Aide Memoire characterizes documentary materials identified and published by Georgian national Igor Giorgadze as being "about a questionable activity of so-called Lugar Center for Public Health Research" and asserts that the US Army Medical Research Directorate-Georgia "carries out double purpose research activities in the field of highly dangerous infectious diseases." This follows repeated allegations by Russian officials to the effect that the Lugar Center is carrying out work prohibited by the BWC. The United States reiterates its unqualified statement that we are not carrying out activities at the Lugar Center, or anywhere else, that are prohibited by the BWC. Furthermore, none of the permitted activities undertaken or funded by the U.S. government are conceived or conducted with a view to their potential application for prohibited purposes. We would like to provide the following additional information to help the Russian Federation understand the peaceful and legitimate nature of the activities occurring at the Center.

The Lugar Center is owned and operated by the Georgian National Center for Disease Control and Public Health. The Center's mission is to promote public and animal health through infectious disease detection, epidemiological monitoring and analysis, and research for the benefit of Georgia, the South Caucasus region, and the global community. The Lugar Center is staffed by the Georgian Ministries of Health, Agriculture, and Education and Sciences, as well as guest scientists from the United States, other countries, and international organizations, including the World Health Organization and the World Organization for Animal Health. The director of

The United States takes seriously its obligations under the BWC and CWC and has a comprehensive domestic legal regime to implement its obligations under Article IV of the BWC and Article VII of the CWC. (See, for BWC, U.S. Code, Title 18, Part I, Chapter 10, Section 175; for CWC, U.S. Code, Title 18, Part I, Chapter 11(B), Section 229). These laws make clear that, inter alia, the development and production of a biological or chemical weapon is prohibited under U.S. law, and any violation of those laws is punishable by penalties ranging from fines to imprisonment. The laws are vigorously enforced by the Federal Bureau of Investigation and other law enforcement agencies, and violations are prosecuted by the Department of Justice. Therefore, while an individual may be able to hold a patent for an invention of the type discussed here as a domestic legal matter, it is clear that production of such an invention for use as a weapon would violate the relevant laws implementing the United States' obligations under the BWC or CWC and be punishable by fines and/or imprisonment. Furthermore, the decision to issue such a patent does not violate U.S. obligations under the BWC or CWC.

However, the United States appreciates the Russian Federation's raising this issue, as it appears that a number of States Parties to these Conventions, including Russia, issue patents or publish patent applications for devices designed for delivery of toxins, biological or chemical agents, or insects that might raise similar questions. A preliminary and non-exhaustive search identified,

among others, patents granted by the Russian Federation (e.g., RU2189001 C2, Bullet-cavity holding poisonous substance; RU2095742 C1, Bullet with chamber/cavity capable of delivering a chemical payload; RU2585124 C2, Weapon with shell containing a chemical payload). In addition, the preliminary search identified patent applications published by China (e.g., CN103322866, Bullet-explosive core with biochemical agent storage chamber) and the Russian Federation (e.g., RU2014143420, Biological active bullets, systems, and methods). In light of this practice, it appears that there may be value in sharing best practices for identifying and handling patent applications for inventions that may raise security concerns.

The development and production of a biological or chemical weapon are prohibited under the national law, but the decision to issue a patent does not violate the U.S. obligations under the BTWC and the CWC.